ShawContract®

Fieldstone 6 x 6 Cove Inside Corner

PVC-Free

Style Number	**CT48K**
Composition	**Ceramic**
Tile Type	**Trim**
Body Type	**Through-body Quarry**
Finish	**Matte**
Nominal Dimensions	**7" x 6" | 17.78 cm x 15.24 cm**
Actual Dimensions	**7" x 6" | 17.78 cm x 15.24 cm**
Overall Thickness	**0.5" | 12.7 mm**
Edge Profile	**Pressed**
Country Of Origin	**United States**
Installation Area	**Walls**
Retail Unit Of Measure	**Sold by the individual piece**

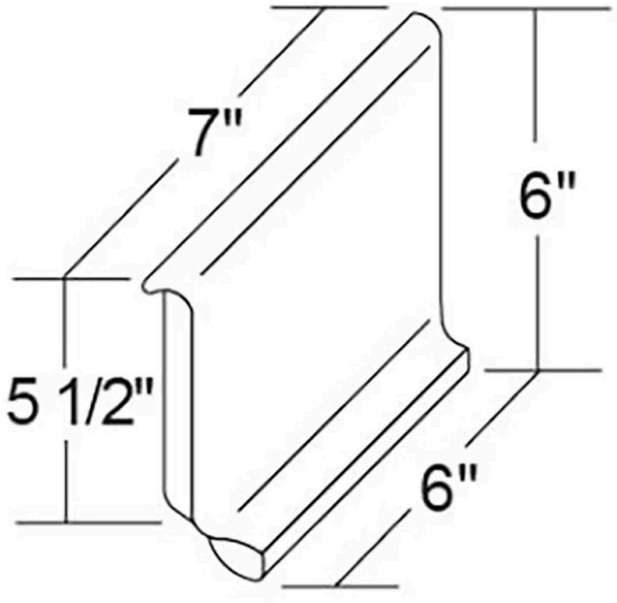

Packaging

Pieces per Carton	**14**
Area per Carton	**4.2 ft²**
Weight per Carton	**21 lbs**
Area per Pallet	**420 ft²**
Boxes per Pallet	**100 boxes**

Performance + Testing

Shade Variation	**V1**
Breaking Strength (ASTM C648)	≥ **250 lbf**
Water Absorption (ASTM C373) %	≤ **0.50% (Impervious (Porcelain))**
DCOF	≥ **0.42**
Scratch Hardness (ASTM MOHS)	**7**
Frost Resistance (ASTM C1026)	**Resistant**
Chemical Resistance (ASTM C650)	**Class A**
Deep Abrasion (ASTM C1243)	**Class 4**

Warranties

1 Year Commercial Limited Warranty

For reference purposes only if printed or downloaded.

ShawContract®

Fieldstone 6 x 6 Cove Inside Corner

Available Colorways


155 Desert

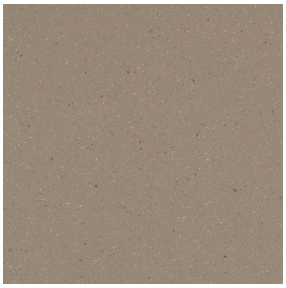
550 Tumble


850 Ruby

Additional Information

Per ANSI A326.3, a DCOF of ≥ 0.42 is recommended for tiles in commercial applications. Tiles with a DCOF < 0.42 are not recommended for wet or slippery areas. Contaminants like water, oil, or grease can increase slip risk—use caution when selecting products for such environments. For approved Areas of Application, please reference the chart above. For more information, visit www.tcnatile.com.

Not for use on ramps.

Due to natural variation in ceramic and porcelain tile, final selection should be based on actual product samples.

Ceramic Porcelain Step by Step Installation
Maintenance Guidelines

Made in the USA

230 Douthit Ferry Road | Cartersville GA 30120 | USA | 1 800.257.7429 | shawcontract.com

For reference purposes only if printed or downloaded.